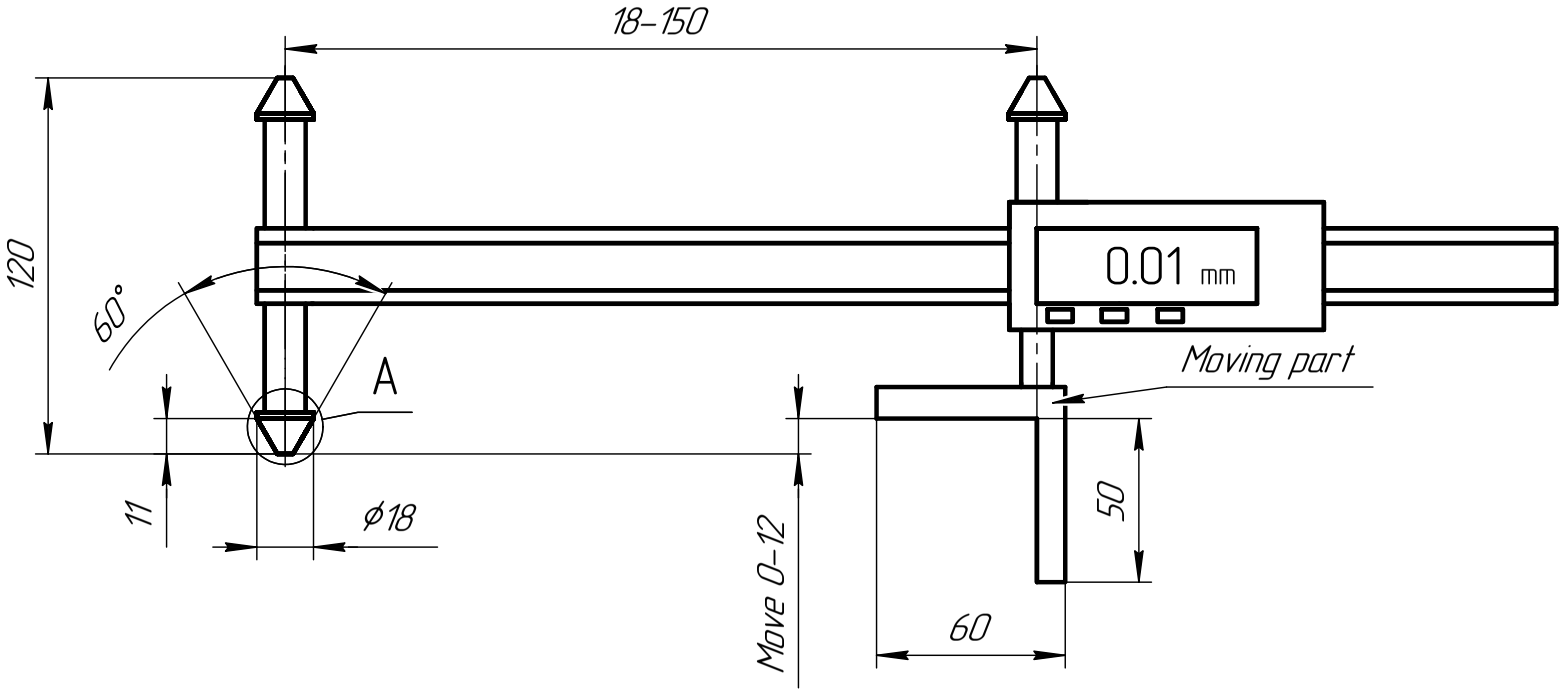

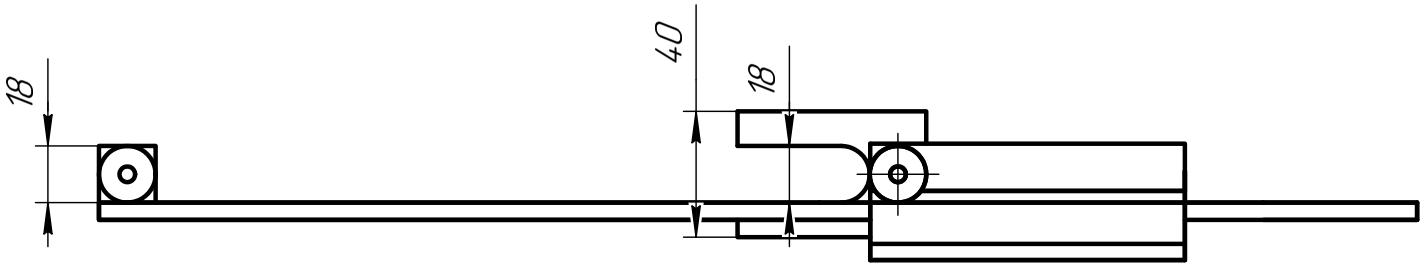

A (2:1)

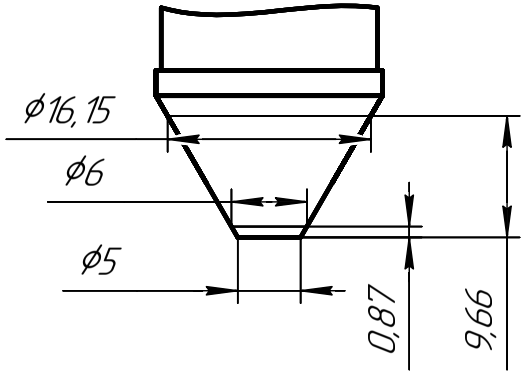

D=6.00 mm – Tmin (thickness of measured material) = 0,87 mm
D=16.15 mm – Tmin (thickness of measured material) = 9.66 mm